LOCUS MAP

NOT TO SCALE

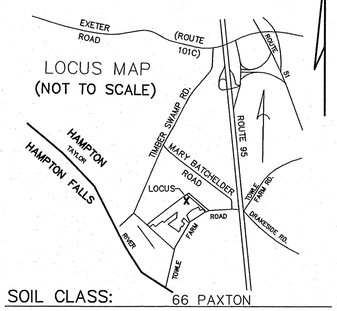

SOIL CLASS: 66 PAXTON

(SOURCE: USDA–SCS SOIL SURVEY)

BENCH MARKS: DATUM = ASSUMED

#1 SET NAIL BROKEN HUB EL 50.00

#2 SET NAIL BASE 8" OAK EL 48.49

#3 TOP OF END POST RAIL FENCE EL 52.24

DESIGN INTENT:

1. THE BOTTOM OF THE EFFLUENT DISPOSAL SYSTEM SHALL BE CONSTRUCTED AT ELEVATION 48.5
2. THERE IS/ARE APPROX 0.8 FT BELOW ORIGINAL GROUND ON THE HIGH CONTOUR THE DESIGNED EDS.

SUITABLE REPLACEMENT AREA:

SYSTEM MUST BE REBUILT IN PLACE OR REDESIGNED.

LEGEND:

50 — EXISTING CONTOUR
(50) — PROPOSED CONTOUR
50.0 — EXISTING SPOT ELEVATION
(50.0) — PROPOSED SPOT ELEVATION

NOTES:

1. THIS PLAN IS NOT TO BE CONSTRUED AS A BOUNDARY SURVEY. PROPERTY LINES SHOWN ARE APPROXIMATED BASED ON INFORMATION FROM THE FOLLOWING SOURCE: TITLE INSURANCE SURVEY BY OTHERS
2. NHDES–WS&PCD SUBDIVISION APPROVAL #12569, #13391
3. THIS SYSTEM IS NOT DESIGNED TO HANDLE GARBAGE DISPOSAL, JACUZZI BATH, OR SEWAGE EJECTOR PUMP WASTE. BACKWASH FROM WATER SOFTENER SYSTEMS SHOULD BE DISCHARGED TO A SEPARATE DRYWELL.
4. NO SURFACE WATER OR WELL WITHIN 75' OF PROPOSED SYSTEM.
5. THESE MOBILE HOME SITES ARE IN A SECTION OF THE PARK THAT PREDATES 1967 ENABLING LEGISLATION. HAMPTON TAX MAP #138 LOTS 1–40 AND 1–41.
6. A SEPARATE PERMIT IS REQUIRED FROM THE TOWN OF HAMPTON FOR NEW AND IN–KIND REPLACEMENT SYSTEMS.

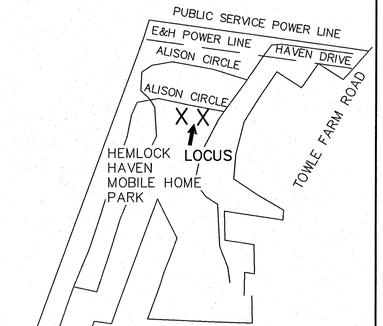

PLOT PLAN

1"=APPROX 200'

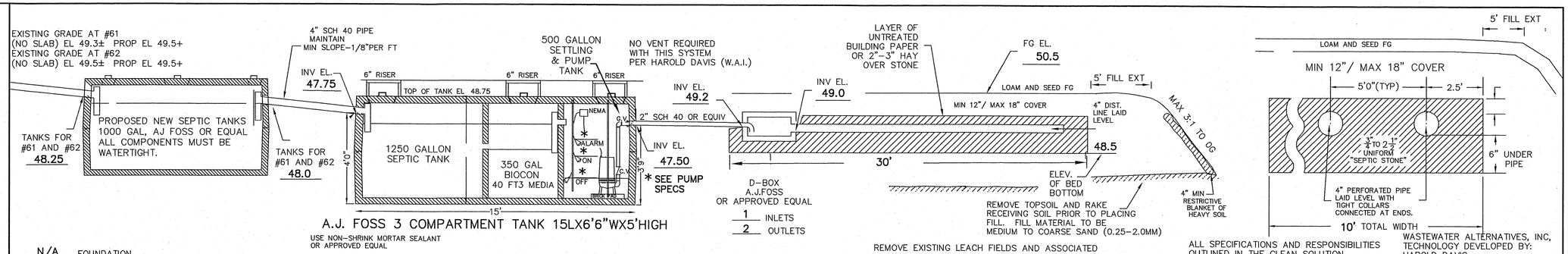

CROSS SECTION DISPOSAL SYSTEM – NOT TO SCALE

ALL SPECIFICATIONS AND RESPONSIBILITIES OUTLINED IN THE CLEAN SOLUTION MANUAL ARE A PART OF THIS DESIGN. MAINTENANCE CONTRACT MUST BE EXECUTED PRIOR TO INSTALLATION.

WASTEWATER ALTERNATIVES, INC, TECHNOLOGY DEVELOPED BY: HAROLD DAVIS 37 CHAMPNEY STREET GROTON, MA 01450 978 448–2415

PLAN : 1"=20'

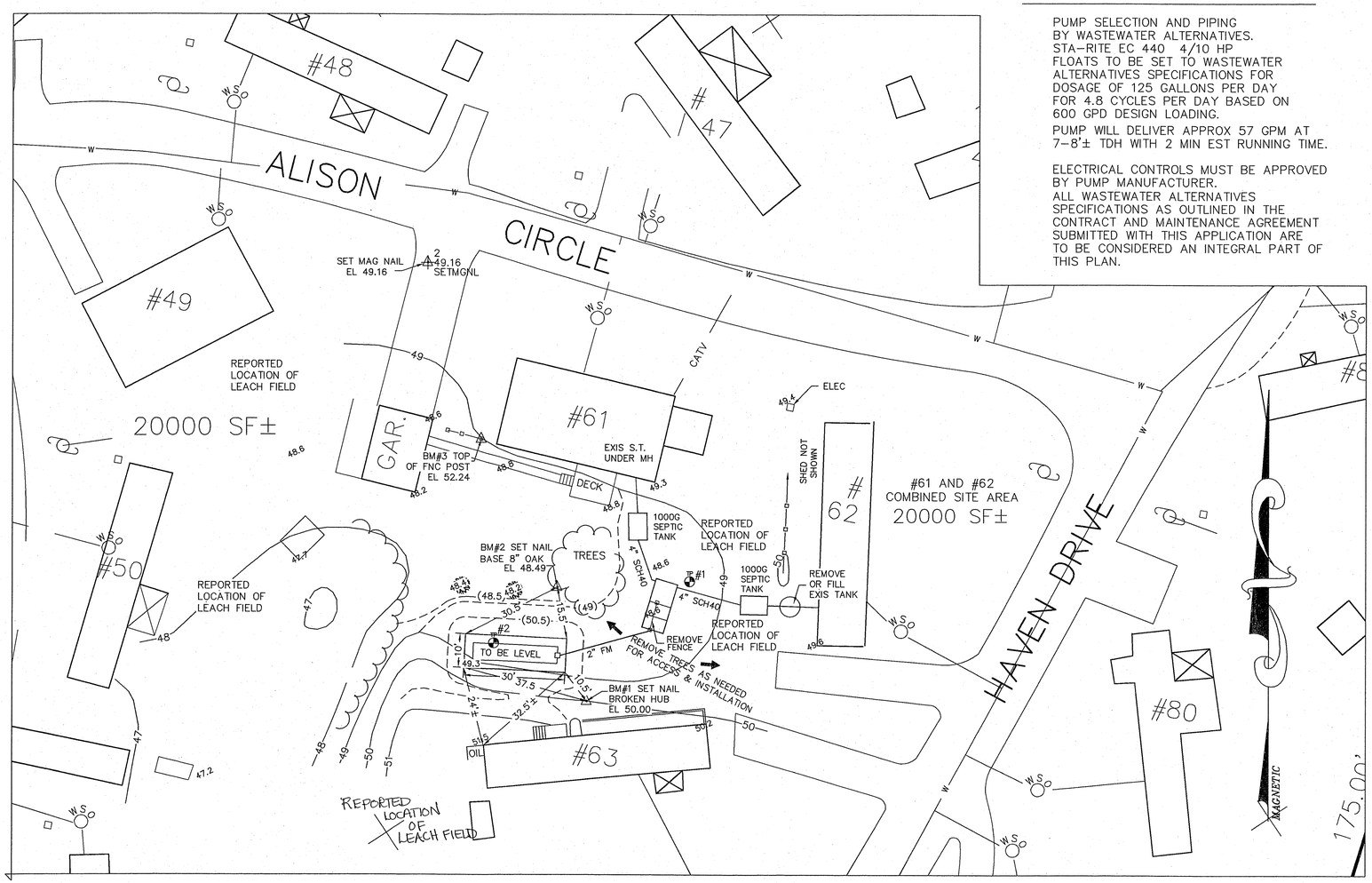

PUMP SPECIFICATIONS

PUMP SELECTION AND PIPING BY WASTEWATER ALTERNATIVES. STA–RITE EC 440 4/10 HP FLOATS TO BE SET TO WASTEWATER ALTERNATIVES SPECIFICATIONS FOR DOSAGE OF 125 GALLONS PER DAY FOR 4.8 CYCLES PER DAY BASED ON 600 GPD DESIGN LOADING.

PUMP WILL DELIVER APPROX 57 GPM AT 7–8'± TDH WITH 2 MIN EST RUNNING TIME.

ELECTRICAL CONTROLS MUST BE APPROVED BY PUMP MANUFACTURER. ALL WASTEWATER ALTERNATIVES SPECIFICATIONS AS OUTLINED IN THE CONTRACT AND MAINTENANCE AGREEMENT SUBMITTED WITH THIS APPLICATION ARE TO BE CONSIDERED AN INTEGRAL PART OF THIS PLAN.

TP TEST PIT DATA

DATE: MARCH 6, 2008

TOWN INSPECTOR: N/A

TEST PIT #1

0 –10" TOPSOIL TO BE REMOVED
10–14" 2.5Y6/6 CLEAN SAND FILL TO BE REMOVED
14–16" ORIGINAL TOPSOIL TO BE REMOVED
16–24" 10YR4/6 FINE SANDY LOAM, MOIST FRIABLE
24–60" 2.5Y5/4 SILTY FINE SANDY LOAM, FREE WATER ESHWT @ 24", OBS H2O @ 24", NO REFUSAL

TEST PIT #2

0 –8 " TOPSOIL TO BE REMOVED
8 –32" 2.5Y6/6 CLEAN SAND FILL TO BE REMOVED
32–34" ORIGINAL TOPSOIL TO BE REMOVED
34–60" 2.5Y5/4 SILTY FINE SANDY LOAM, FREE WATER ESHWT @ 34", OBS H2O @ 34", NO REFUSAL

PT PERC TEST DATA

PERCOLATION TEST NOT POSSIBLE DUE TO CURRENT SATURATION OF SUBGRADE SOILS (NOT A DETERMINATIVE FACTOR FOR CLEAN SOLUTION SYSTEM)

DESIGN LOADING: TWO EXISTING 2 BEDROOM MOBILE HOMES FOR TOTAL 4 BEDROOMS (600 GPD)

AREA REQUIRED: PER CLEAN SOLUTION SPECIFICATIONS: 200 SF DISPERSAL AREA REQUIRED

AREA PROPOSED: 10' X 30' = 300 SF PROVIDED (DISPERSAL AREA)

PROPOSED REPLACEMENT

SEPTIC SYSTEM PLAN

EXISTING FAILED SYSTEM (#61)

LOCUS: #62 AND #61 HEMLOCK HAVEN HAMPTON, NH

OWNER: RICHARD AND RUTH BLEY
PO BOX 154
MELVIN VILLAGE, NH 03850–0154

NEW HAMPSHIRE Designer of Subsurface Disposal Systems
Ann W. Bialobrzeski No. 348
Water Supply & Pollution Control

APPLICANT:
STOCKTON SERVICES
PO BOX 1306
HAMPTON, NH 03842

DATE: MARCH 10, 2008

APPROVAL: #61 CA 2008092393 #62 CA 2008092394

524

SYSTEM OWNER IS RESPONSIBLE FOR THE FOLLOWING OPERATING REQUIREMENTS MAINTENANCE CONTRACT SUBMITTED WITH APPLICATION FOR SYSTEM APPROVAL.

ENV–WS 1023.01 (a) SEPTIC TANKS SHALL BE INSPECTED FOR ACCUMULATION OF SLUDGE AND SURFACE SCUM AT LEAST ONCE EVERY YEAR. (b) WHEN THE COMBINED THICKNESS OF SLUDGE AND SURFACE SCUM EQUAL 1/3 OR MORE OF THE TANK DEPTH, THE TANK SHALL BE PUMPED BY A LICENSED SEPTIC TANK PUMPER.

ENV–WS 1023.02 TO PREVENT OBSTRUCTION OF THE DISTRIBUTION LINES AND LEACH FIELD, GREASE AND BULKY WASTE SHALL NOT BE FLUSHED OR OTHERWISE INTRODUCED INTO THE SEPTIC SYSTEM.

ENV–WS 1023.03 TOXIC AND HAZARDOUS MATERIALS SHALL NOT BE FLUSHED OR OTHERWISE INTRODUCED INTO THE SEPTIC SYSTEM.

ENV–WS 1023.04 TO PREVENT DAMAGE TO THE DISTRIBUTION LINES AND LEACH FIELD, VEHICLES, LIVESTOCK, AND OTHER HEAVY OBJECTS SHALL NOT BE ALLOWED ON THE LEACH FIELD.

ENV–WS 1023.05 IF WET AREAS APPEAR ON THE GROUND SURFACE ABOVE THE DISTRIBUTION LINES OR LEACH FIELD OR IF DISAGREEABLE ODORS OCCUR, THE SYSTEM SHALL BE INSPECTED FOR THE SOURCE OF THESE PROBLEMS, AND CORRECTIVE ACTION SHALL BE TAKEN.

LOCUS MAP

NOT TO SCALE

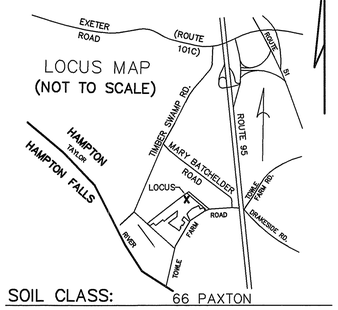

SOIL CLASS: 66 PAXTON

(SOURCE: USDA–SCS SOIL SURVEY)

BENCH MARKS: DATUM = ASSUMED

#1 SET NAIL BROKEN HUB EL 50.00

#2 SET NAIL BASE 8" OAK EL 48.49

#3 TOP OF END POST RAIL FENCE EL 52.24

DESIGN INTENT:

1. THE BOTTOM OF THE EFFLUENT DISPOSAL SYSTEM SHALL BE CONSTRUCTED AT ELEVATION 48.5
2. THERE IS/ARE APPROX 0.8 FT BELOW ORIGINAL GROUND ON THE HIGH CONTOUR THE DESIGNED EDS.

SUITABLE REPLACEMENT AREA:

SYSTEM MUST BE REBUILT IN PLACE OR REDESIGNED.

LEGEND:

- 50 — EXISTING CONTOUR
- (50) — PROPOSED CONTOUR
- 50.0 — EXISTING SPOT ELEVATION
- (50.0) — PROPOSED SPOT ELEVATION

NOTES:

1. THIS PLAN IS NOT TO BE CONSTRUED AS A BOUNDARY SURVEY. PROPERTY LINES SHOWN ARE APPROXIMATED BASED ON INFORMATION FROM THE FOLLOWING SOURCE: TITLE INSURANCE SURVEY BY OTHERS
2. NHDES–WS&PCD SUBDIVISION APPROVAL #12569, #13391
3. THIS SYSTEM IS NOT DESIGNED TO HANDLE GARBAGE DISPOSAL, JACUZZI BATH, OR SEWAGE EJECTOR PUMP WASTE. BACKWASH FROM WATER SOFTENER SYSTEMS SHOULD BE DISCHARGED TO A SEPARATE DRYWELL.
4. NO SURFACE WATER OR WELL WITHIN 75' OF PROPOSED SYSTEM.
5. THESE MOBILE HOME SITES ARE IN A SECTION OF THE PARK THAT PREDATES 1967 ENABLING LEGISLATION. HAMPTON TAX MAP #138 LOTS 1–40 AND 1–41.
6. A SEPARATE PERMIT IS REQUIRED FROM THE TOWN OF HAMPTON FOR NEW AND IN–KIND REPLACEMENT SYSTEMS.

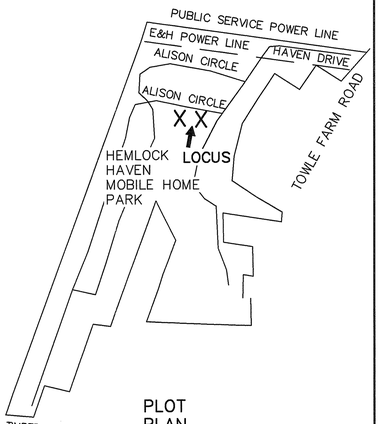

PLOT PLAN

1"=APPROX 200'

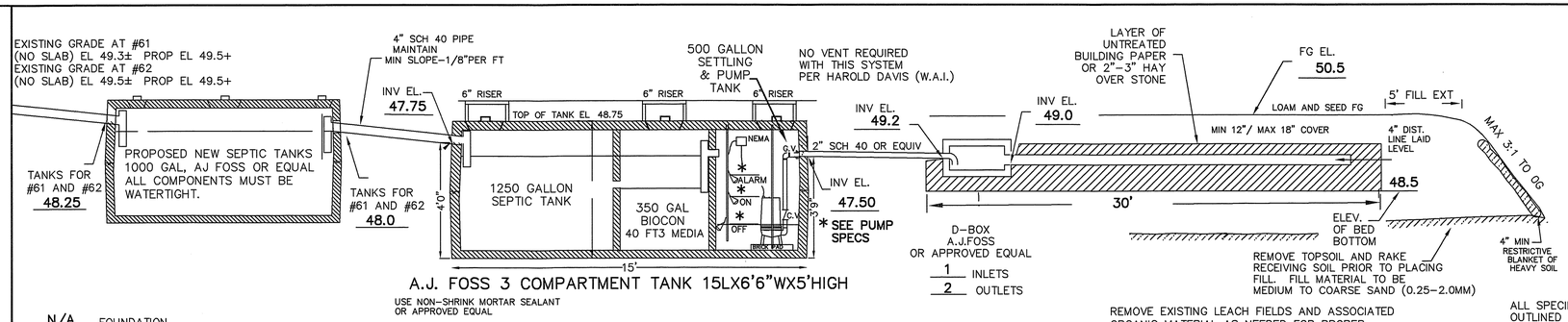

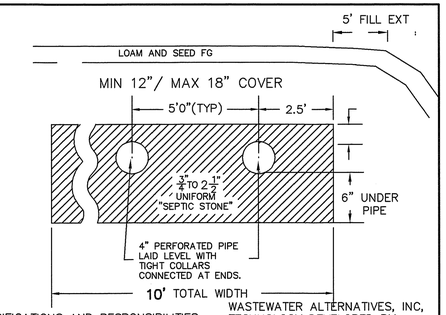

ALL SPECIFICATIONS AND RESPONSIBILITIES OUTLINED IN THE CLEAN SOLUTION MANUAL ARE A PART OF THIS DESIGN. MAINTENANCE CONTRACT MUST BE EXECUTED PRIOR TO INSTALLATION.

WASTEWATER ALTERNATIVES, INC, TECHNOLOGY DEVELOPED BY: HAROLD DAVIS 37 CHAMPNEY STREET GROTON, MA 01450 978 448–2415

CROSS SECTION DISPOSAL SYSTEM – NOT TO SCALE

PLAN : 1"=20'

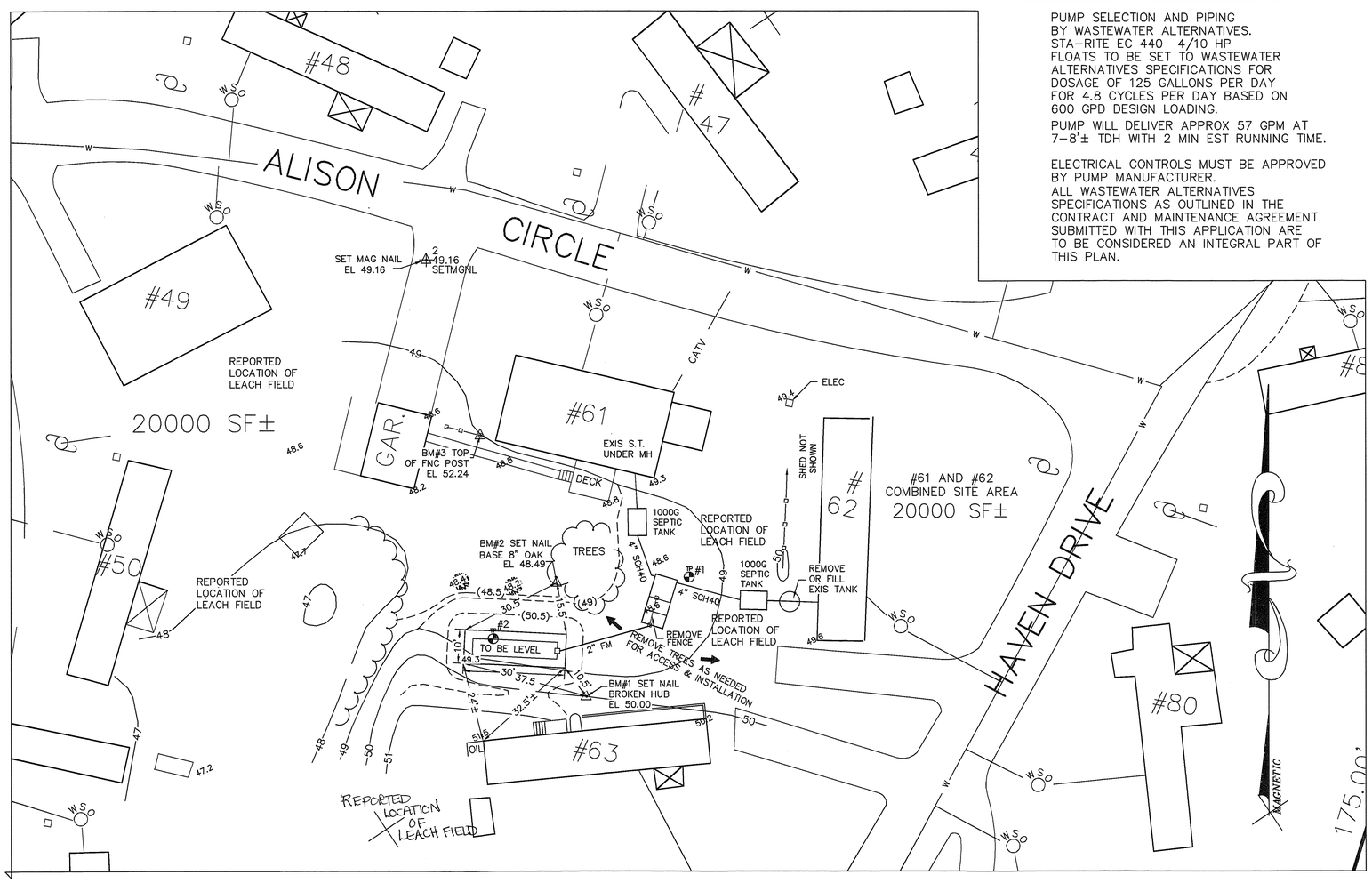

PUMP SPECIFICATIONS

PUMP SELECTION AND PIPING BY WASTEWATER ALTERNATIVES. STA–RITE EC 440 4/10 HP FLOATS TO BE SET TO WASTEWATER ALTERNATIVES SPECIFICATIONS FOR DOSAGE OF 125 GALLONS PER DAY FOR 4.8 CYCLES PER DAY BASED ON 600 GPD DESIGN LOADING.

PUMP WILL DELIVER APPROX 57 GPM AT 7–8'± TDH WITH 2 MIN EST RUNNING TIME.

ELECTRICAL CONTROLS MUST BE APPROVED BY PUMP MANUFACTURER.

ALL WASTEWATER ALTERNATIVES SPECIFICATIONS AS OUTLINED IN THE CONTRACT AND MAINTENANCE AGREEMENT SUBMITTED WITH THIS APPLICATION ARE TO BE CONSIDERED AN INTEGRAL PART OF THIS PLAN.

TEST PIT DATA

DATE: MARCH 6, 2008

TOWN INSPECTOR: N/A

TEST PIT #1

0 –10" TOPSOIL TO BE REMOVED
10–14" 2.5Y6/6 CLEAN SAND FILL TO BE REMOVED
14–16" ORIGINAL TOPSOIL TO BE REMOVED
16–24" 10YR4/6 FINE SANDY LOAM, MOIST FRIABLE
24–60" 2.5Y5/4 SILTY FINE SANDY LOAM, FREE WATER
ESHWT @ 24", OBS H2O @ 24", NO REFUSAL

TEST PIT #2

0 –8 " TOPSOIL TO BE REMOVED
8 –32" 2.5Y6/6 CLEAN SAND FILL TO BE REMOVED
32–34" ORIGINAL TOPSOIL TO BE REMOVED
34–60" 2.5Y5/4 SILTY FINE SANDY LOAM, FREE WATER
ESHWT @ 34", OBS H2O @ 34", NO REFUSAL

PERC TEST DATA

PERCOLATION TEST NOT POSSIBLE DUE TO CURRENT SATURATION OF SUBGRADE SOILS (NOT A DETERMINATIVE FACTOR FOR CLEAN SOLUTION SYSTEM)

DESIGN LOADING: TWO EXISTING 2 BEDROOM MOBILE HOMES FOR TOTAL 4 BEDROOMS (600 GPD)

AREA REQUIRED: PER CLEAN SOLUTION SPECIFICATIONS: 200 SF DISPERSAL AREA REQUIRED

AREA PROPOSED: 10' X 30' = 300 SF PROVIDED (DISPERSAL AREA)

PROPOSED REPLACEMENT

SEPTIC SYSTEM PLAN

EXISTING FAILED SYSTEM (#61)

LOCUS: #62 AND #61 HEMLOCK HAVEN
HAMPTON, NH

OWNER: RICHARD AND RUTH BLEY
PO BOX 154
MELVIN VILLAGE, NH 03850–0154

NEW HAMPSHIRE Designer of Subsurface Disposal Systems • • • Ann W. Bialobrzeski No. 348 Water Supply & Pollution Control

APPLICANT:
STOCKTON SERVICES
PO BOX 1306
HAMPTON, NH 03842

DATE: MARCH 10, 2008

APPROVAL: #61 CAZ008092393 #62 CAZ008092394

524

SYSTEM OWNER IS RESPONSIBLE FOR THE FOLLOWING OPERATING REQUIREMENTS MAINTENANCE CONTRACT SUBMITTED WITH APPLICATION FOR SYSTEM APPROVAL.

ENV–WS 1023.01 (a) SEPTIC TANKS SHALL BE INSPECTED FOR ACCUMULATION OF SLUDGE AND SURFACE SCUM AT LEAST ONCE EVERY YEAR. (b) WHEN THE COMBINED THICKNESS OF SLUDGE AND SURFACE SCUM EQUAL 1/3 OR MORE OF THE TANK DEPTH, THE TANK SHALL BE PUMPED BY A LICENSED SEPTIC TANK PUMPER.

ENV–WS 1023.02 TO PREVENT OBSTRUCTION OF THE DISTRIBUTION LINES AND LEACH FIELD, GREASE AND BULKY WASTE SHALL NOT BE FLUSHED OR OTHERWISE INTRODUCED INTO THE SEPTIC SYSTEM.

ENV–WS 1023.03 TOXIC AND HAZARDOUS MATERIALS SHALL NOT BE FLUSHED OR OTHERWISE INTRODUCED INTO THE SEPTIC SYSTEM.

ENV–WS 1023.04 TO PREVENT DAMAGE TO THE DISTRIBUTION LINES AND LEACH FIELD, VEHICLES, LIVESTOCK, AND OTHER HEAVY OBJECTS SHALL NOT BE ALLOWED ON THE LEACH FIELD.

ENV–WS 1023.05 IF WET AREAS APPEAR ON THE GROUND SURFACE ABOVE THE DISTRIBUTION LINES OR LEACH FIELD OR IF DISAGREEABLE ODORS OCCUR, THE SYSTEM SHALL BE INSPECTED FOR THE SOURCE OF THESE PROBLEMS, AND CORRECTIVE ACTION SHALL BE TAKEN.